Colorlight

# A100

## Player

Specification V3.5



# Overview

A100 is a new-generation cloud networking player that supports synchronous display and asynchronous playback. It supports 4K H.265/H.264 hard decoding, 4K VP9 decoding playback. Maximum load capacity 1.3 million pixels and support up to 1920 × 1200@60Hz. Based on the ColorlightCloud platform, functions such as player monitoring, program creating, program scheduling, program centralized publishing, and multi-level privilege management are supported.



A100 supports networking methods like WiFi, LAN, 4G (optional), which enables rapid deployment of intelligent cloud management, multi-screen, multi-service, cross-regional unified management. A100 has a permanent WiFi hotspot, and can connect to other WiFi hotspots. Program management and parameter settings can be achieved via smartphone, tablet and PC. A100 supports command scheduling and LAN scheduling, and can achieve automatic brightness setting to meet the brightness adjustment needs of various occasions.

With PlayerMaster, A100 offers program editing and publishing and program multi-window arbitrary arrangement, allows for program materials playback such as video, picture, text, table, clock, streaming media, webpages, weather. Besides, it supports plug and play content from USB flash drive. Program update and management can be achieved via wired network.

As a brand-new networking control system, A100 enjoys strong advantages in the application of outdoor commercial advertising screens, indoor government screen, public place information release screen, chain screen, doorstep screen, advertising players.

Colorlight Cloud

## Features

- Loading capacity up to 1.3 million pixels, with maximum 4096 pixels in width or 2560 pixels in height. [1]
- HDMI up to 1920×1200@60Hz.
- Synchronous display or asynchronous playback, as well as the priority setting of these two modes.
- Strong processing performance, 4K H.265/H.264 hard decoding, 4K VP9 decoding playback.
- 32GB storage, available 25G storage capacity.
- Fully compatible with conventional synchronous control system program management and display configuration.

- **Intelligent control, convenient management**
  - USB flash drive can plug and play content and updates the list of programs.
  - Synchronized playback of multiple screens (NTP synchronization).
  - Scheduled commands, LAN-based scheduling and Internet-based scheduling.
  - Ambient temperature, humidity and brightness and other parameters monitoring, as well as automatic display brightness adjustment.

- **Convenient program management**
  - Rich media materials, such as pictures, videos, texts, tables, clocks, stream media, webpages and weather.
  - Support overlaying of multiple windows, whose size and location can be freely adjusted.
  - Support multi-page playback, up to 32 program pages.

- **All-round control scheme**
  - Manage player via different platforms like PC, smartphone, Pad.
  - Different application software for management, convenient for various situations.

- **Network communication**
  - WiFi 2.4G frequency band, WiFi hotspot mode or WiFi client mode[2].
  - LAN, supports DHCP mode and static mode.
  - 4G communication, 4G network (optional).

Colorlight Cloud Tech Ltd

[1] To fully display the signal source using auto scaling, Max(signal source width, control area width) × Max(signal source height, control area height) must be ≤ 1920×1200; otherwise, please manually adjust the signal resolution and EDID settings.

[2] The stability of the signal communication between WiFi hotspots and WiFi clients is related to the transmission distance, the wireless network environment and the WiFi frequency band.

- GPS positioning (optional).

## Specification

| | |
|---|---|
| **Basic parameters** | |
| Hardware performance | 4K HD hard decoding playback. |
| Storage | 32GB (25GB available) . |
| Loading capacity | Up to 1.3 million pixels, with a maximum 4096 pixels in width, or a maximum 2560 pixels in height. |
| OS | Android. |
| Receiving cards supported | All series of Colorlight receiving cards. |
| **File format** | |
| Program schedule | Multi-program sequential playback, support program timing setting. |
| Split program window | Arbitrary splitting and overlaying of windows, and multi-page playback. |
| Video format | HEVC (H.265), H.264, VP9, MPEG-4 Part 2 and Motion JPEG. |
| Audio format | AAC-LC, HE-AAC, HE-AAC v2, MP3, Linear PCM. |
| Image format | Bmp, jpg, png, gif, etc. |
| Text format | Txt, rtf, word, ppt, excel, etc. (Used in conjunction with PlayerMaster). |
| Text display | Single-line text, multi-line text, static text and scrolling text. |
| Multi-window display | Multi-video windows[3], multiple pictures / texts, scrolling texts, scrolling pictures, date / time / week and weather forecast windows. Flexible content display in different areas. |
| Window overlaying | Arbitrary overlapping with transparent and opaque effects. |
| RTC[4] | Real-time clock display and management. |
| U disk plug and play | Support. |

Colorlight Cloud Tech Ltd

## Hardware

[3] Support 1×4K window, or 2×1080P windows, or 4×720P windows.

[4] If the device is not connected to a network and its internal battery is fully depleted, the device time will reset to the factory settings when the power is off, which may affect time-relevant functions. Replace the battery to resolve this issue.

## Front panel

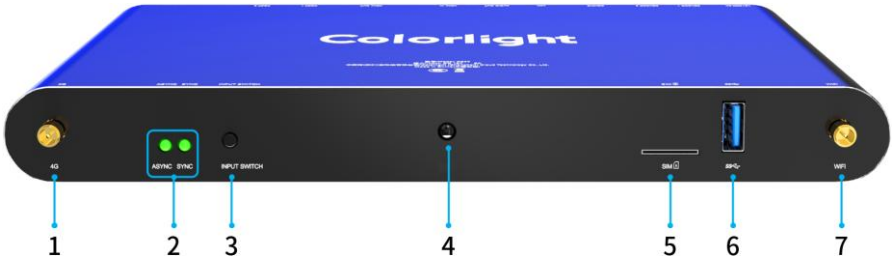


| No. | Name | Function |
|---|---|---|
| 1 | 4G | Connect to 4G antenna (optional). |
| 2 | ASYNC SYNC | Indicator of sync and async modes. |
| 3 | INPUT SWITCH | Switch between sync and async modes. |
| 4 | IR | Receive information via infrared light (remote control, easy to operate). |
| 5 | SIM | Micro-SIM card slot (use with 4G module). |
| 6 | USB | USB 3.0, connect to USB flash drive or USB camera. |
| 7 | WiFi | Connect to WiFi antenna, support 2.4G band.<br>- WiFi hotspot.<br>- WiFi client mode (connect to other WiFi routers). |

## Rear panel

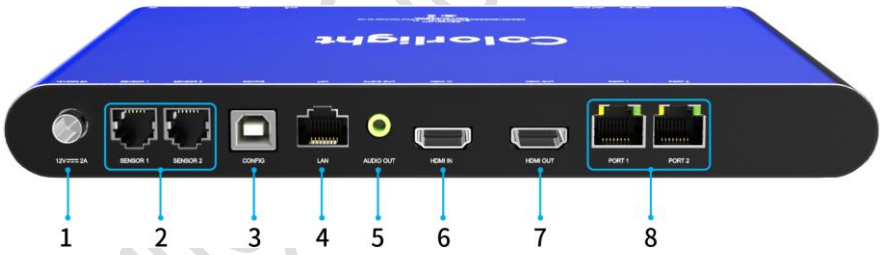


| No. | Name | Function |
|---|---|---|
| 1 | DC IN | DC 12V power input. |
| 2 | SENSOR 1/2 | RJ11 port, connect to the sensor for automatic brightness adjustment or monitoring ambient light, smoke, temperature, humidity and air quality. |
| 3 | CONFIG | USB-B port, connect to the PC for debugging or program publishing. |
| 4 | LAN | Ethernet port, connect to wired network. |
| 5 | AUDIO OUT | 3.5mm audio interface, HiFi stereo output. |
| 6 | HDMI IN | Input sync HDMI signal. |
| 7 | HDMI OUT | Output sync or async HDMI signal. |
| 8 | PORT1-2 | Ethernet output, connect to receiver cards of the display. |

Colorlight Cloud Tech Ltd

## Parameters

| Dimensions (W×H×D) | |
|---|---|
| Unboxed | 234.8mm (9.24")×26.0mm (1.02")×137.4mm (5.41") |
| Boxed | 360.0mm (14.17")×93.0mm (3.66")×225.0mm (8.86") |
| **Weight** | |
| Net weight | 0.83kg (1.83lbs) |
| Total weight | 1.70kg (3.75lbs) |
| **Electrical specification** | |
| Power input | DC12V |
| Rated power | 12W |
| **Operating environment** | |
| Temperature | -20℃~65℃ / -4°F~149°F |
| Humidity | 0%RH~95%RH, non-condensing |
| **Certification** | |
| CCC, CE, CE-RED, FCC, FCC-ID.<br>*If the product does not have the relevant certifications required by the countries or regions where it is to be sold, please contact Colorlight to confirm or address the problem. Otherwise, the customer shall be responsible for<br>the legal risks caused or Colorlight has the right to claim compensation. | |

## Reference dimensions

Unit: mm

### A100 player

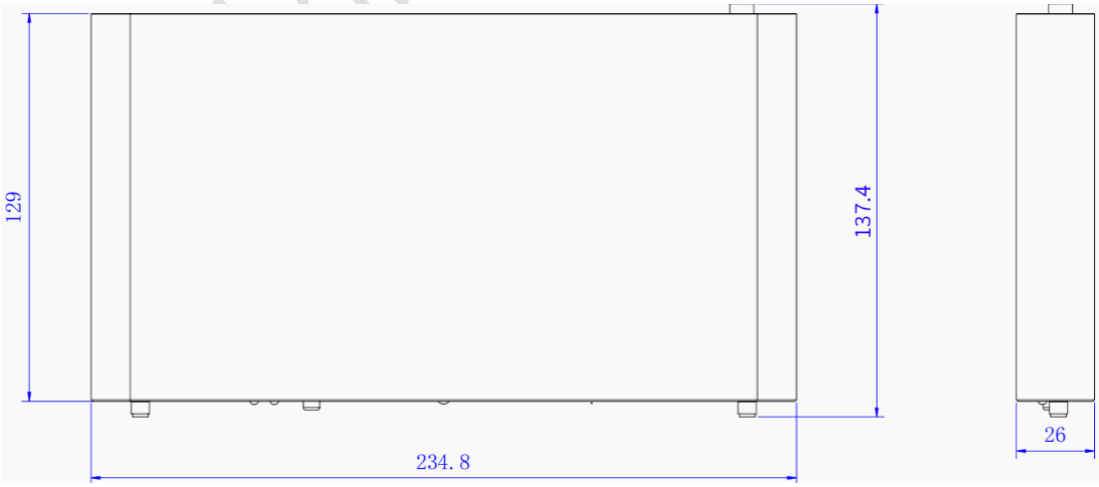


Colorlight Cloud Tech Ltd

## WiFi antenna

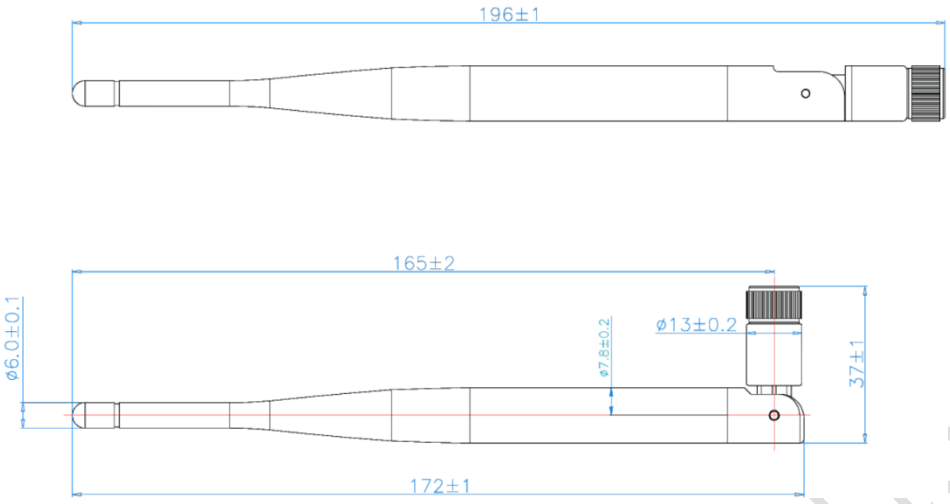


## 4G antenna (optional)

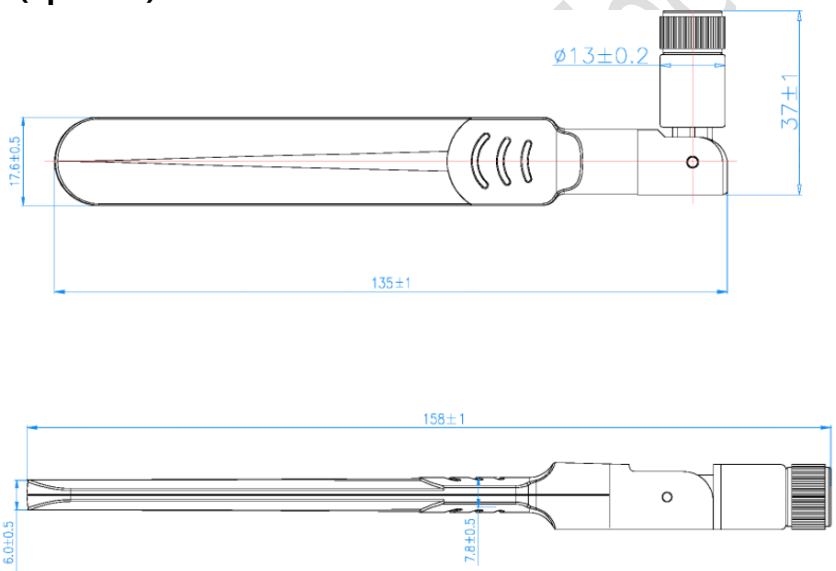

## Statement

Copyright © 2024 Colorlight Cloud Tech Ltd. . All rights reserved.

Without the express written permission of Colorlight Cloud Tech Ltd., no unit or individual may copy, copy, transcribe or translate part or all of the contents of this book. Not to be used for any commercial or profit-making purposes in any form or by any means.

Colorlight® The logo is a registered trademark of Colorlight Cloud Tech Ltd.

Without the written permission of the company or the trademark owner, no unit or individual may in any way or for any reason use, reproduce, modify, disseminate, transcribe or infringe all or any part of the above-mentioned trademark, nor may it be bundled with other products. Use sales.

As factors such as product batches and production processes may change, in order to provide accurate product information, specification parameters, and product characteristics in order to match the actual product, the text description and picture effects in the document will be adjusted and revised appropriately. If it is necessary to carry out the above modification and adjustment without prior notice, please refer to the actual product.

Welcome to choose to use the products of Colorlight Cloud Tech Ltd. If you have any questions or suggestions in use, please contact us through official channels, we will try our best to support and listen to your valuable suggestions. For more information and updates, please visit the official website www.colorlightinside.com or scan the QR code.

Service Phone

4008 770 775

Colorlight Cloud Tech Ltd.

Official Website: www.colorlightinside.com
Head Office Address:Room 37F-39F,Building 8, Zone A,
Shenzhen International Innovation Valley, Vanke Cloud City, Dashi Yilu,
Nanshan District, Shenzhen, China